COOLIUS

Y50A

A/C Service-Unit for refrigerant R1234yf with integrated refrigerant analyzer

Service book

ENG Original Manual

Doc.No.: 225802_Rev.03.01

Contents

1 Flow diagram

1.1 Flow diagram without Refrigerant analyzer circuit

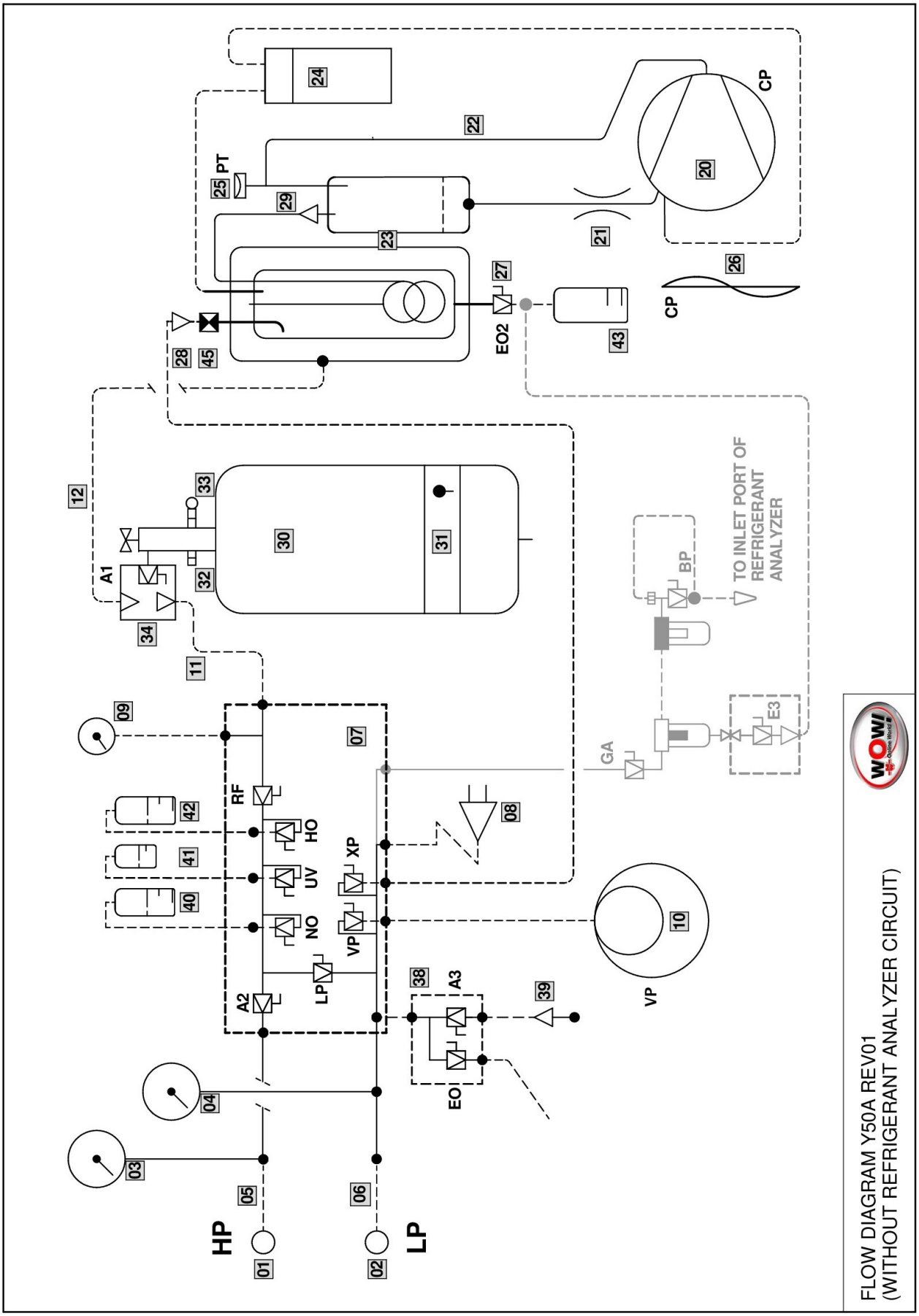

1.1 Flow diagram - SPARE PARTS LIST

N°	DESCRIPTION	CODE
01	HP SERVICE COUPLING (**Y50** / **Y50A** R1234yf)	0605512006
02	LP SERVICE COUPLING (**Y50** / **Y50A** R1234yf)	0605512001
03	HP GAUGE (**A50** / **Y50** / **Y50A** R134a/R1234yf)	0710175085
04	LP GAUGE (**A50** / **Y50** / **Y50A** R134a/R1234yf)	0710145085
05	3 m SERVICE HOSE HP (**Y50** / **Y50A** R1234yf)	0603019030
06	3 m SERVICE HOSE LP (**Y50** / **Y50A** R1234yf)	0603013030
07	MANIFOLD (**Y50** / **Y50A** R1234yf)	0510006013
08	ELECTRONIC PRESSURE TRANSDUCER	0712350007
09	INTERNAL VESSEL PRESSURE GAUGE	0710040250
10	VACUUM PUMP 128L	0420023137
11	CHARGE HOSE 7/16 UNF O-RING (**Y50** / **Y50A** R1234yf)	0603511041
12	RECOVERY HOSE 7/16 UNF O-RING (**Y50** / **Y50A** R1234yf)	0603400235
20	COMPRESSOR 5/8 HP	0416190027
21	CAPILLARY	0602099420
22	COMPRESSOR COPPER PIPE	0602005020
23	OIL DISTILLER GROUP (**Y50** / **Y50A** R1234yf)	0611013057
24	MAIN FILTER	0607350344
25	HIGH PRESSURE SWITCH	0703014019
26	COMPRESSOR FAN (D172 230V - LONG CABLE FAN)	0408172053
27	ELECTRIC VALVE GROUP “1A” (LP / XP / RF / A1* / A2 / EO / EO2 / A3 / *GA*** / *BP*** / *E3***)	0500142050
28	CHECK VALVE - RECOVERY (G1/8 FM)	0501086063
29	CHECK VALVE - OIL DISTILLER (7/16UNF O-Ring MM)	0501071605
30	LIQUID RECEIVER 20L GROUP (**Y50** / **Y50A** R1234yf)	0612020059
31	HEAT BELT	0404550058
32	OVERPRESSURE VALVE	0503016045
33	SAFETY VALVE (**Y50** / **Y50A** R1234yf)	0503144024
34	INTERNAL VESSEL ADAPTER GROUP (**Y50** / **Y50A** R1234yf)	0612511050
38	MANIFOLD FOR PRESSURE TEST	0512200005
39	CHECK VALVE - NITROGEN TEST (G1/8 FF)	0501086062
40	NEW OIL BOTTLE 250 ml (YELLOW PIPE)	0819015250
41	UV TRACER BOTTLE 100 ml	0819015100
42	POE OIL BOTTLE 250 ml (GREEN PIPE)	0819015255
43	USED OIL SEALED BOTTLE 250 ml	0815015250
45	EXPANSION VALVE GROUP	NOT AVAILABLE

(*) Applies to R1234yf models only (Y50 / Y50A).

(**) Applies to Y50A only.

1.2 Refrigerant analyzer circuit

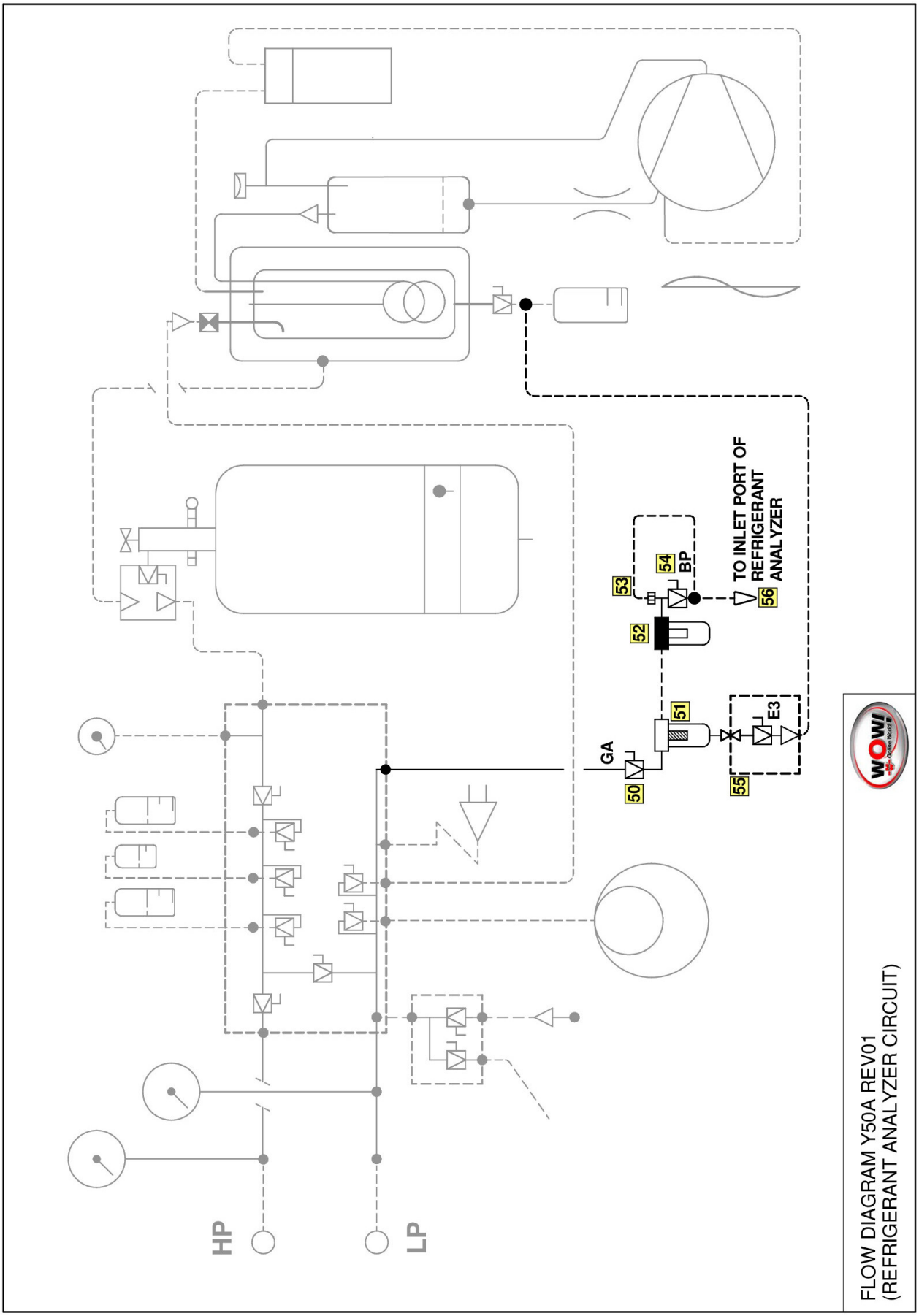

1.2 Refrigerant analyzer circuit - SPARE PARTS LIST

N°	DESCRIPTION	CODE
50	ELECTRIC VALVE GROUP “1A” (LP / XP / RF / A1* / A2 / EO / EO2 / A3 / *GA*** / *BP*** / *E3***)	0500142050
51	COALESCENT FILTER	0607999054
52	EXTERNAL WHITE FILTER (5 pcs)	0617999120
	EXTERNAL TRANSPARENT BOWL	0607999015
53	FLOW RESTRICTOR	0607799022
54	ELECTRIC VALVE GROUP “1A” (LP / XP / RF / A1* / A2 / EO / EO2 / A3 / *GA*** / *BP*** / *E3***)	0500142050
55	COMPLETE ELECTRIC VALVE GROUP “E3”	0510006027
	ELECTRIC VALVE GROUP “1A” (LP / XP / RF / A1* / A2 / EO / EO2 / A3 / *GA*** / *BP*** / *E3***)	0500142050
	PISTON FOR “1A” ELECTRIC VALVE (LP / XP / RF / A1* / A2 / EO / EO2 / A3 / *GA*** / *BP*** / *E3***)	0500142150
56	REFRIGERANT ANALYZER (R1234yf)	0400705234
	FILTER FOR REFRIGERANT ANALYZER	0607799011
--	ANALYZER MAINTENANCE KIT	7500100051

(*) Applies to R1234yf models only (Y50 / Y50A).

(**) Applies to Y50A only.

2 Electric diagram

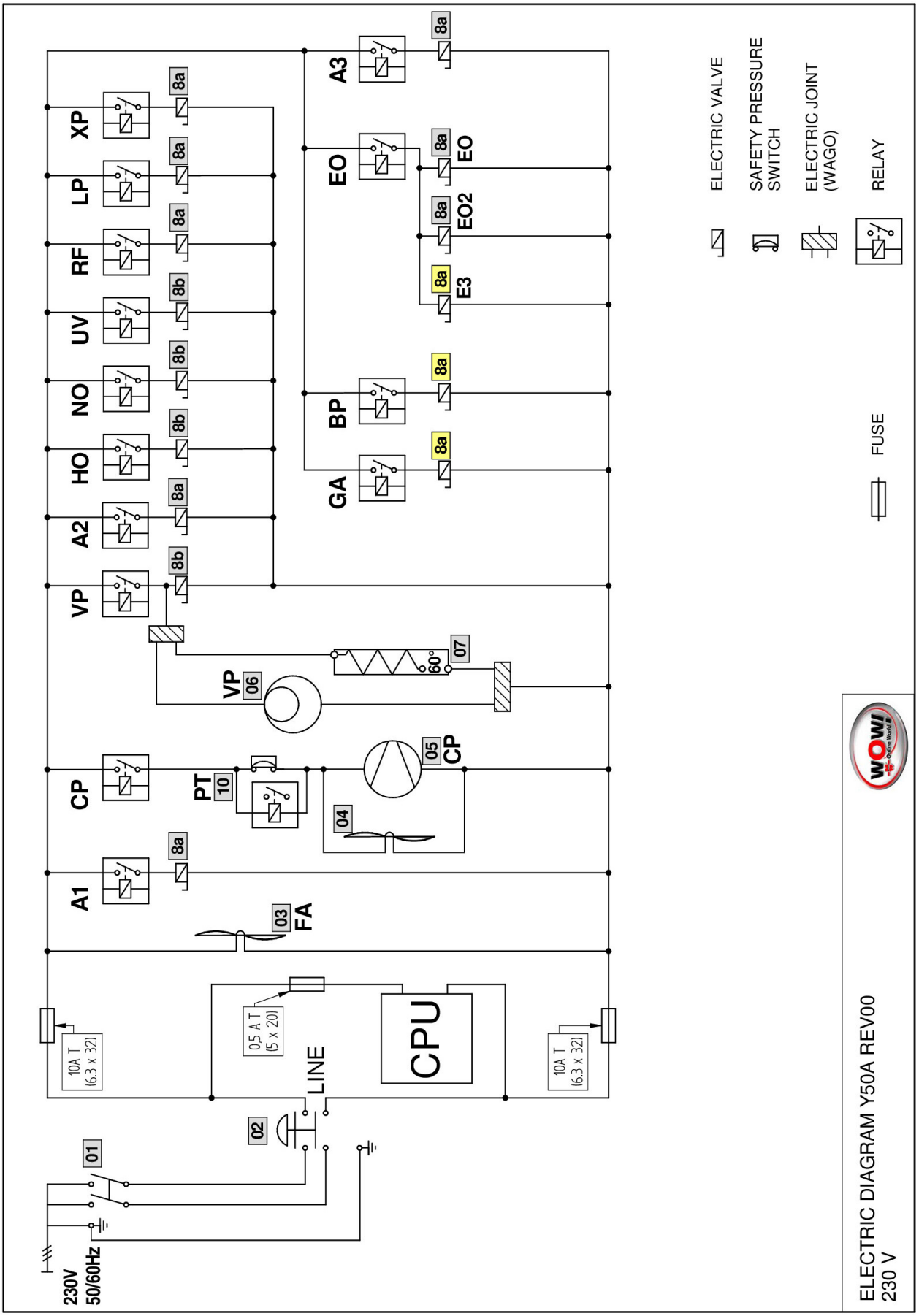

2.1 Electric diagram - SPARE PARTS LIST

N°	DESCRIPTION	CODE
01	MAIN SWITCH	0404230022
02	EMERGENCY SAFETY SWITCH **(R1234yf ONLY)**	0414020005
03	MAIN FAN (D172 230V - LONG CABLE FAN)	0408172053
04	COMPRESSOR FAN (D172 230V - LONG CABLE FAN)	0408172053
05	COMPRESSOR 5/8 HP	0416190027
06	VACUUM PUMP 128L	0420023137
07	HEAT BELT	0404550058
8a	ELECTRIC VALVE GROUP “1A” (LP / XP / RF / A1* / A2 / EO / EO2 / A3 / *GA*** / *BP*** / *E3***)	0500142050
	PISTON FOR “1A” ELECTRIC VALVE (LP / XP / RF / A1* / A2 / EO / EO2 / A3 / *GA*** / *BP*** / *E3***)	0500142150
8b	ELECTRIC VALVE GROUP “1B” (NO / UV / HO / VP)	0500142075
	PISTON FOR “1B” ELECTRIC VALVE (NO / UV / HO / VP)	0500142175
10	HIGH PRESSURE SWITCH	0703014019

(*) Applies to R1234yf models only (Y50 / Y50A).

(**) Applies to Y50A only.

3 Machine

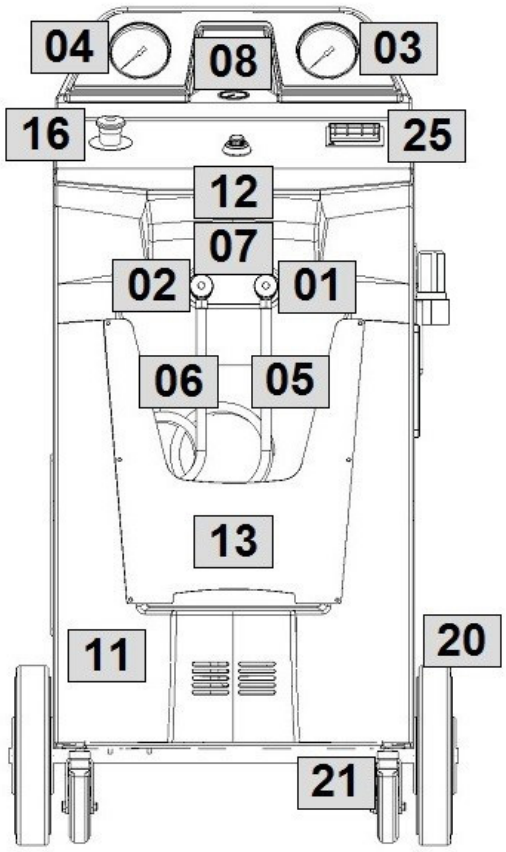
04
08
03
16
25
12
07
02
01
06
05
13
11
20
21

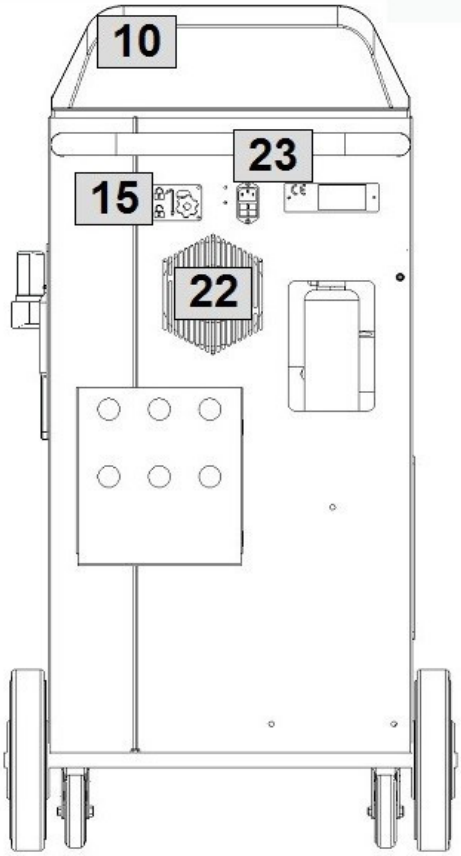
10
23
15
22

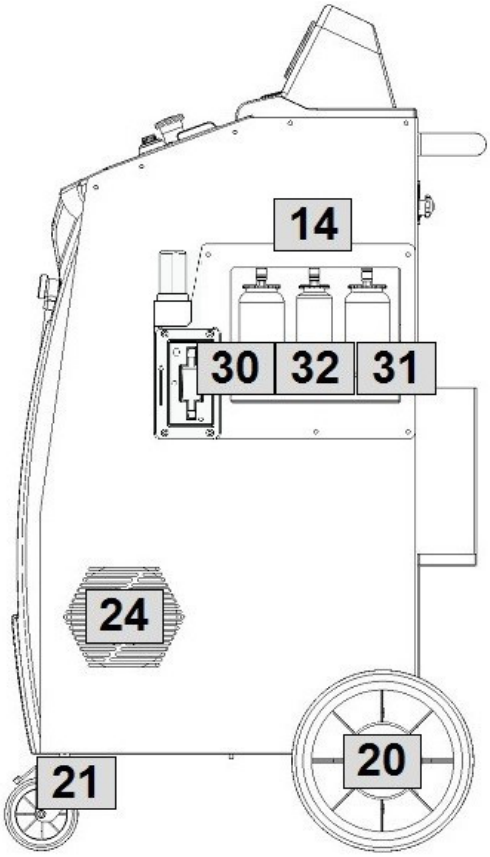
14
30
32
31
24
21
20

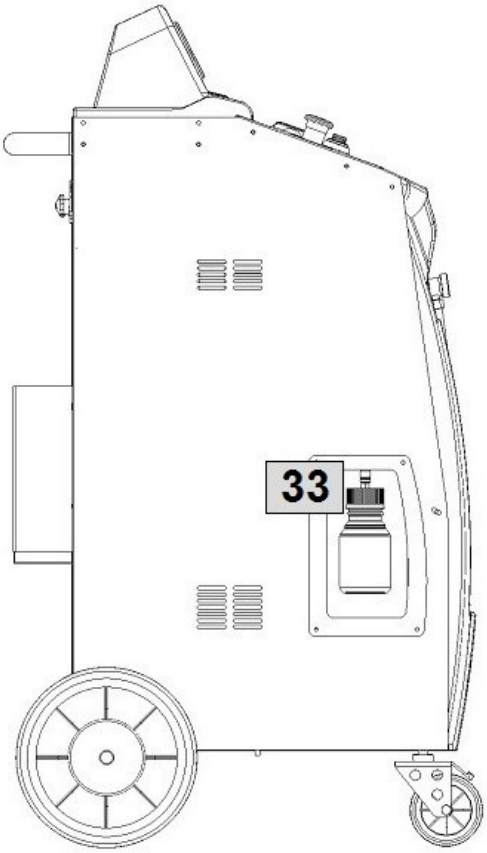
33

3.1 Machine - SPARE PARTS LIST

N°	DESCRIPTION	CODE
01	HP SERVICE COUPLING (**Y50** / **Y50A** R1234yf)	0605512006
02	LP SERVICE COUPLING (**Y50** / **Y50A** R1234yf)	0605512001
03	HP GAUGE (**A50** / **Y50** / **Y50A** R134a/R1234yf)	0710175085
04	LP GAUGE (**A50** / **Y50** / **Y50A** R134a/R1234yf)	0710145085
05	3 m SERVICE HOSE HP (**Y50** / **Y50A** R1234yf)	0603019030
06	3 m SERVICE HOSE LP (**Y50** / **Y50A** R1234yf)	0603013030
07	BY-PASS KIT (**Y50** / **Y50A** R1234yf)	0612401055
08	INTERNAL VESSEL PRESSURE GAUGE	0710040250
10	TOP COVER 40/50 SERIES	0800700515
11	FRONT PANEL 40/50 SERIES	0800700500
12	**Y50A** STICKER	0807005018
13	FRONT POCKET with “WOW!” LOGO	0810411085
	FRONT POCKET with “WABCOWÜRTH” LOGO	0810411089
	FRONT POCKET with “WÜRTH” LOGO	0810411093
14	**Y50A** “PAG/UV/POE” ANALYZER PLASTIC FRAME	0810411055
15	STAR GRIP SCREW for TRANSPORT LOCK	0208002047
16	EMERGENCY SAFETY SWITCH **(R1234yf ONLY)**	0414020005
20	REAR WHEEL D250	0206001251
21	FRONT WHEEL WITH BRAKE D100	0206001100
22	MAIN FAN (D172 230V - LONG CABLE FAN)	0408172053
23	MAIN SWITCH	0404230022
24	COMPRESSOR FAN (D172 230V - LONG CABLE FAN)	0408172053
25	PRINTER KIT	0413002025
30	NEW OIL BOTTLE 250 ml (YELLOW PIPE)	0819015250
31	POE OIL BOTTLE 250 ml (GREEN PIPE)	0819015255
32	UV TRACER BOTTLE 100 ml	0819015100
33	USED OIL SEALED BOTTLE 250 ml	0815015250

3.2 Manifold - SPARE PARTS LIST

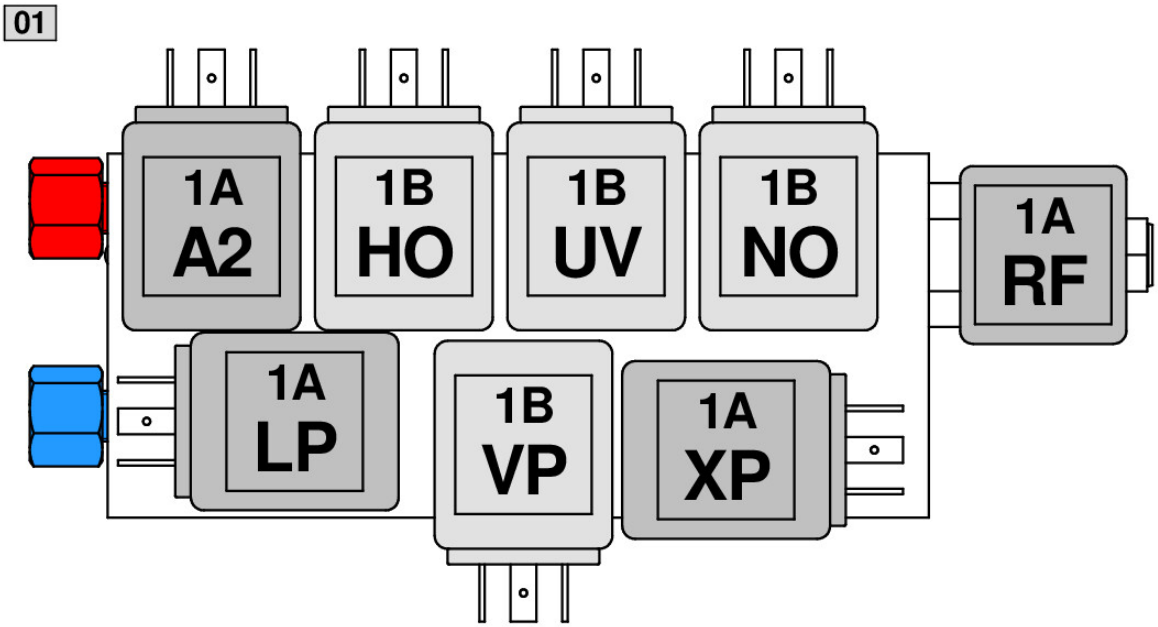

N°	DESCRIPTION	CODE
01	MANIFOLD (**Y50** / **Y50A** R1234yf)	0510006013
1A	ELECTRIC VALVE GROUP “1A” (LP / XP / RF / A1* / A2 / EO / EO2 / A3 / *GA*** / *BP*** / *E3***)	0500142050
	PISTON FOR “1A” ELECTRIC VALVE (LP / XP / RF / A1* / A2 / EO / EO2 / A3 / *GA*** / *BP*** / *E3***)	0500142150
1B	ELECTRIC VALVE GROUP “1B” (NO / UV / HO / VP)	0500142075
	PISTON FOR “1B” ELECTRIC VALVE (NO / UV / HO / VP)	0500142175

(*) Applies to R1234yf models only (Y50 / Y50A).

(**) Applies to Y50A only.

3.3 Other parts - SPARE PARTS LIST

N°	DESCRIPTION	CODE
	INTERNAL SUPPORT BUSHING for 4/6 TUBE	0102107704
	BRASS OGIVE for 2/4 TUBE	0102137404
	INTERNAL SUPPORT BUSHING for 2/4 TUBE	0104999105
	O-RING 4,48x1,78 for 1/4 COPPER PIPE	0106178448
	O-RING 29,00x2,00 for TRANSPARENT BOWL	0106200029
	O-RING 4,42x2,62 for 100L/128L VACUUM PUMP	0106262442
	RILSAN PA11 SR HL NEUTRAL PIPE 4/6	0107000164
	RILSAN PA11 NEUTRAL PIPE 4/6	0107004006
	RILSAN GREEN PIPE 2/4	0107202004
	RILSAN PA11 BLUE PIPE 2/4	0107402004
	RILSAN BLUE PIPE 6/8	0107406008
	RILSAN PA11 RED PIPE 2/4	0107502004
	YELLOW PU PIPE 4/6	0107834006
	BLUE PU PIPE 4/6	0107844006
	CRISTAL PIPE 4/6	0107904006
	USB DUST PROTECTION CAP	0400009013
	MAINBOARD “A” (PWR) for 40/50 SERIES	0402014051
	MAINBOARD “A” (PWR) for 40/50 SERIES - PROTECTED	0402037053
	MAINBOARD “B” (DISPLAY) - EUROPEAN VERSION	0402014005
	MAINBOARD “B” (DISPLAY) - CYRILLIC VERSION	0402014007
	PRINTER PAPER ROLL	0403005840
	POWER CORD 3 m (CEE7)	0405270005
	CONTROL KNOB (COOLIUS SELECT)	0411210009
	LOAD CELL 15KG	0714211019
	LOAD CELL 60KG	0714110065
	RED / BLUE RINGS for GAUGES	0800101168
	KEYBOARD (POLYESTER PANEL) for EUR/CYR DISPLAY	0805045052
	MAINTENANCE KIT (FILTER+VACUUM PUMP OIL+GASKETS)	7500100010

3.4 Accessories - SPARE PARTS LIST

N°	DESCRIPTION	CODE
	ADAPTER FOR REFRIGERANT DISPOSAL (**Y50A** R1234yf)	2500150051
	SERVICE HOSES EXTENSION KIT - ADDITIONAL 3 m (R134a)	2501003134
	SERVICE HOSES EXTENSION KIT - ADDITIONAL 3 m (R1234yf)	2501005133
	NITROGEN TEST BRACKET KIT	7500270229

4 Refrigerant analyzer

VERSION PRODUCED UNTIL END OF 2018 (SN UP TO **AD510132** INCLUDED):

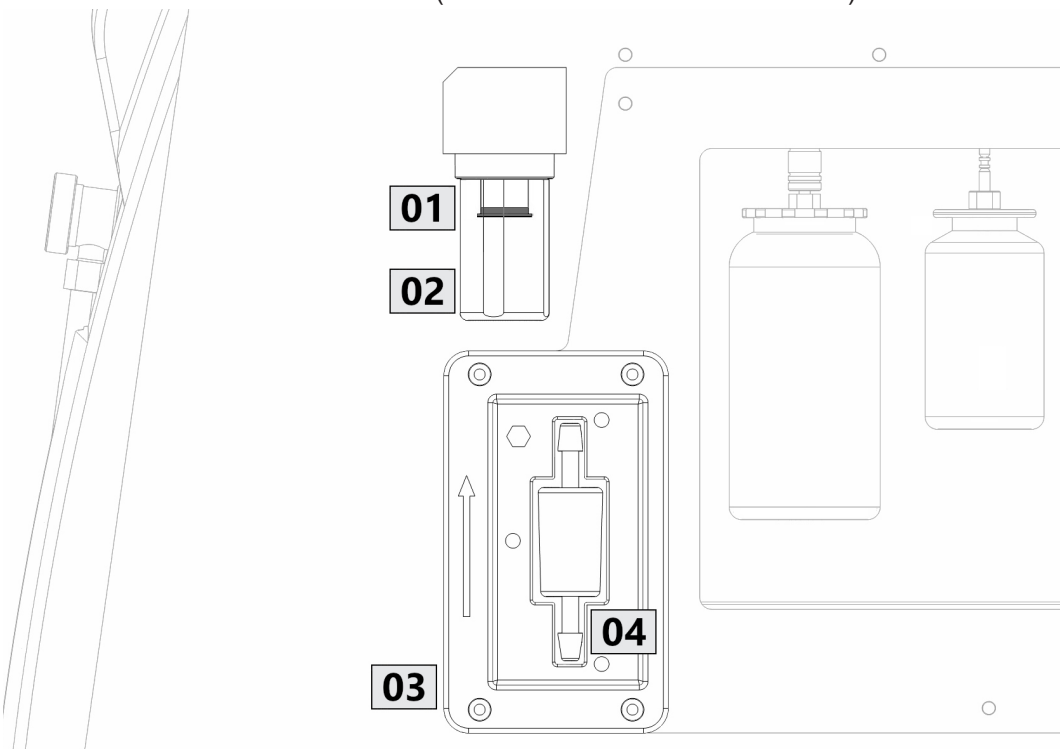

VERSION PRODUCED FROM 2019 ONWARDS (SN FROM **AD510133** INCLUDED):

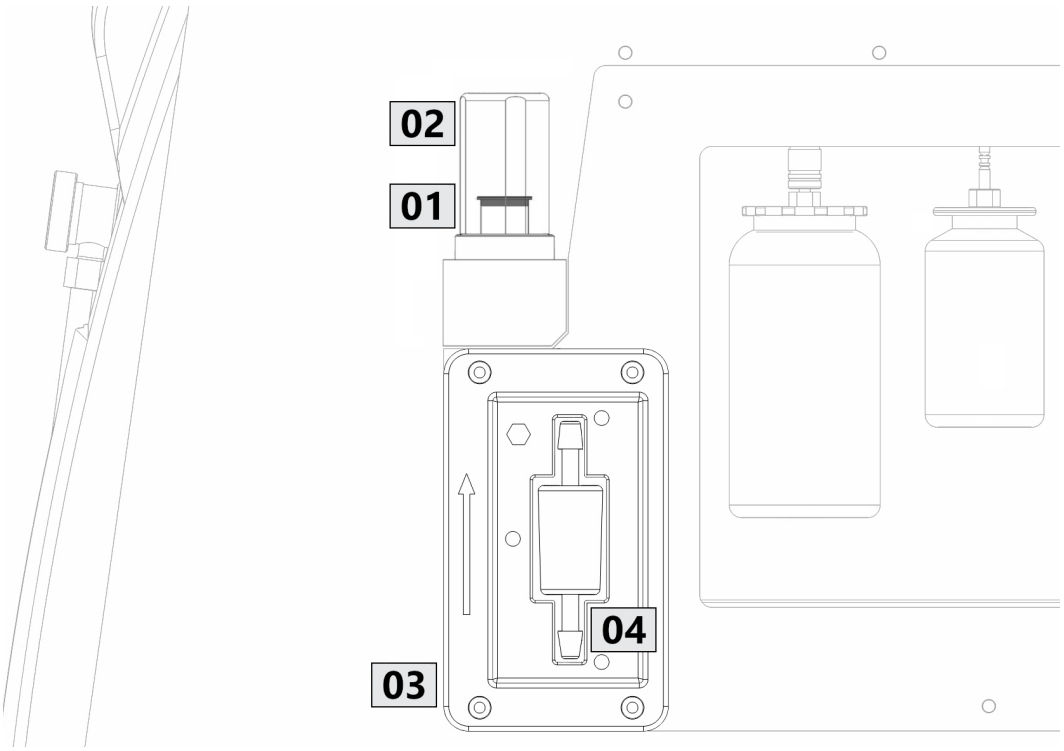

4.1 Refrigerant analyzer - SPARE PARTS LIST

N°	DESCRIPTION	CODE
01	EXTERNAL WHITE FILTER (5 pcs)	0617999120
02	EXTERNAL TRANSPARENT BOWL	0607999015
	O-RING 29,00x2,00 for TRANSPARENT BOWL	0106200029
03	REFRIGERANT ANALYZER	0400705234
	AIR SENSOR for REFRIGERANT ANALYZER	0705001012
04	FILTER FOR REFRIGERANT ANALYZER	0607799011
--	ANALYZER MAINTENANCE KIT - EXTERNAL WHITE FILTER (1 pc) - COALESCENT FILTER (1 pc) - FLOW RESTRICTOR (1 pc) - O-RING 29,00x2,00 (1 pc)	7500100051

4.2 Refrigerant analyzer error codes

No	Error message	Description
0	ERROR 0 Contact SERVICE CENTER	The analyzer is not working. Possible causes: • The analyser cable is not connected: check the connections on the analyser and on the mainboard A (power board); • The analyser is faulty: connect a new analyser to check if the analyser is faulty; • The mainboard A (power board) is faulty: replace the power mainboard..
1	ERROR 1 Perform the test again?	Unstable air or gas readings. Press **START** to try to perform the test again. If the message appears again, please move the machine to another area then try again.
2	ERROR 2 Perform the test again?	Excessively high air or gas readings. Press **START** to try to perform the test again. If the message appears again, please move the machine to another area then try again.
3	ERROR 3 Perform the test again?	Air calibration failed. Press **START** to try to perform the test again. If the message appears again, please move the machine to another area then try again.
4	ERROR 4 Temperature condition out of range!	Environmental conditions out of the analyzer operating range. Please move the machine to another area then try again.
5	ERROR 5 Excess of air or low refrigerant flow.	Large amount of air in the gas sample or no refrigerant flow. Check that the external tank valve is open. If the error persists, replace the analyzer filter and the flow restrictor.
6	ERROR 6 Air sensor expired! Contact SERVICE CENTER	The air sensor is expired. Replace the air sensor.
7	ERROR 7 Perform the test again or contact SERVICE CENTER	The gas pressure is out of range. Verify that the sample exhaust port on the analyzer is not obstructed.
17	ERROR 17 Contact SERVICE CENTER	Refrigerant analyzer not working. Replace the analyzer.
	Not enough pressure for Refrigerant Quality Test	Not enough refrigerant to perform the test. Please check the LP and HP gauges.

4.3 Filter replacement

4.3.1 External white filter replacement

NOTE: *Always use goggles and gloves!*
Contact with the refrigerant can cause blindness and other physical injury to the user!

Before dismounting the filter, start a recovery process to reduce the internal pressure!

IMPORTANT: *Disconnect the plug from the power supply!*

Use a compass wrench to unscrew and remove the transparent bowl.

Unscrew and remove the filter holder.

Open the filter holder and replace the white filter.

IMPORTANT: *Dispose according to local regulations.*

Check the position of the O-ring in the seat of the filter holder.

Reassemble the filter holder and the transparent bowl.

4.3.2 Coalescent filter replacement

NOTE: *Always use goggles and gloves!*
Contact with the refrigerant can cause blindness and other physical injury to the user!

Before dismounting the filter, start a recovery process to reduce the internal pressure!

IMPORTANT: *Disconnect the plug from the power supply!*

Remove the electric valve group by disconnecting the automatic quick coupling as shown in fig. 001 “Electric valve group connected” and fig. 002 “Electric valve group disconnected”.

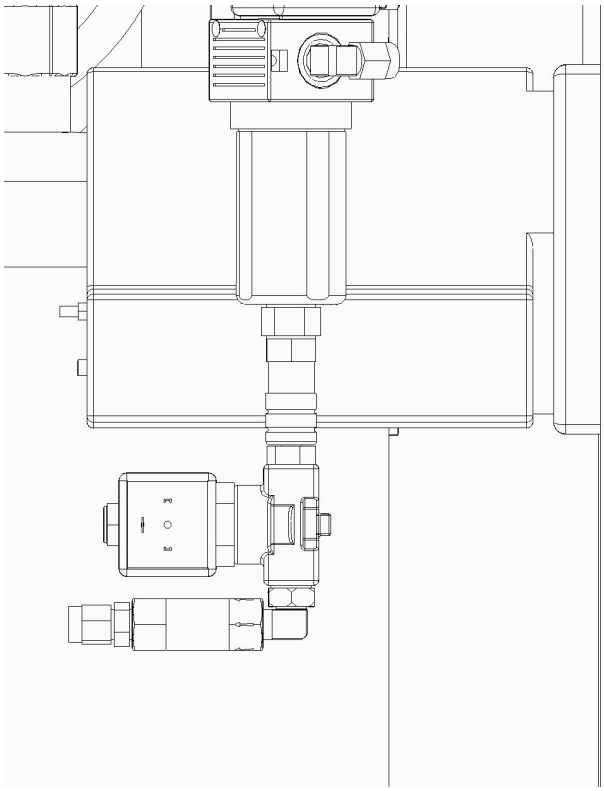

fig. 001 Electric valve group connected

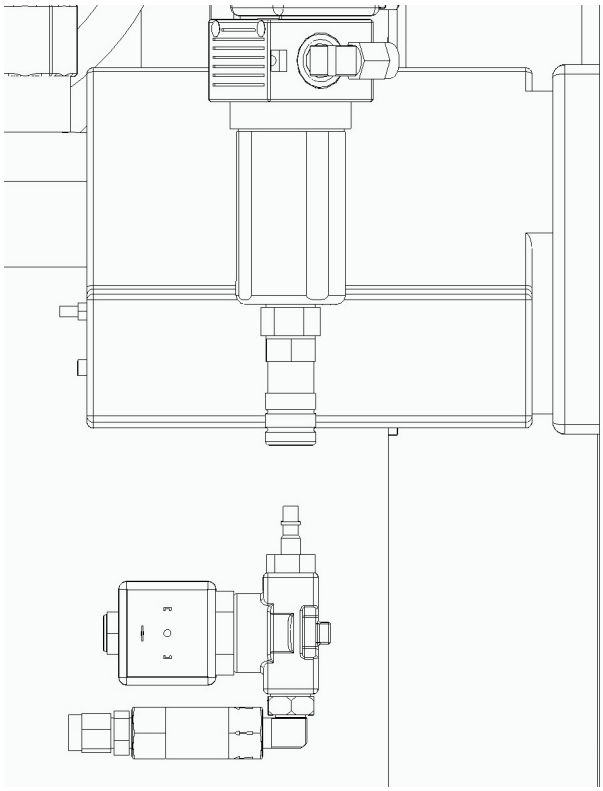

fig. 002 Electric valve group disconnected

Unscrew and then remove the transparent bowl as shown in fig. 003 “Transparent bowl unscrewed”.

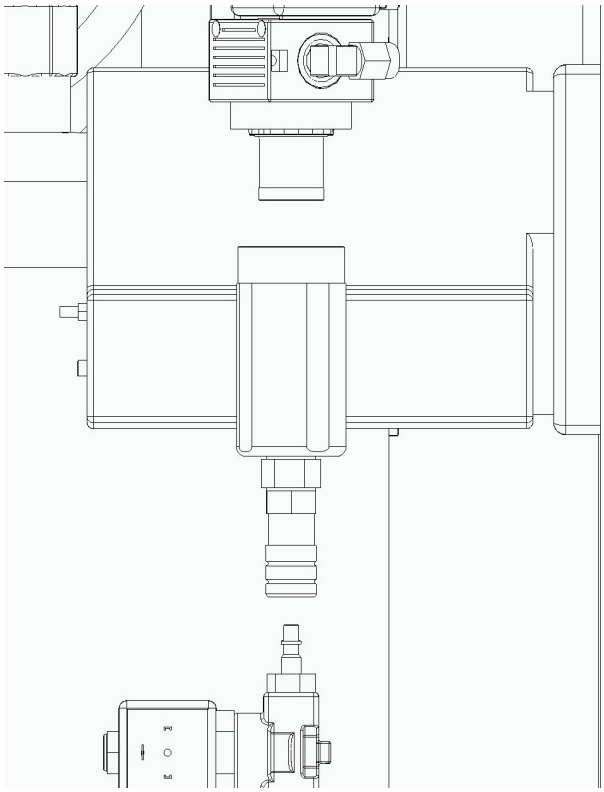

fig. 003 Transparent bowl unscrewed

Replace the coalescent filter and reassemble the components.

IMPORTANT: *Dispose according to local regulations.*

4.3.3 Refrigerant analyzer filter / flow restrictor replacement (NEUTRONICS original spare parts)

NOTE: *Always use goggles and gloves!*
Contact with the refrigerant can cause blindness and other physical injury to the user!

IMPORTANT: *Disconnect the plug from the power supply!*

According to Neutronics specification:

When inspecting the sample filter, look completely around the entire outside diameter of the white filter element located inside of the clear plastic housing.
Look for red spots or the beginnings of discoloration on the white outside diameter of the element. Do not look into the round ends of the white element for red spots or discoloration.
The round ends of the filter may always appear red. If red spots or discolorations are discovered, the sample filter requires replacement to prevent the influx of particulate and oil mists into the instrument.

Remove the existing filter from the retaining clip of the instrument by pulling straight up and out.
Carefully remove the flexible, black rubber tubing connections from both ends of the existing filter.
Do not allow the tubes to slip back into the internal portion of the case.

Install the tube ends onto the barbs of the replacement filter, taking note to align the flow arrow of the filter with the flow arrow on the mounting bezel of the analyzer.
Carefully slide the tubing back into the internal portion of the instrument and seat the new filter into the retaining clip.

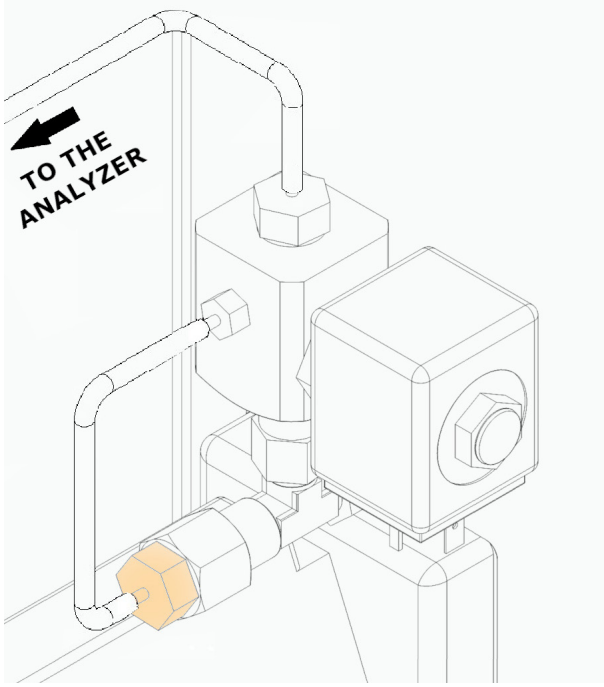

fig. 004 Flow restrictor connection

Remove the flow restrictor by unscrewing the brass element highlighted in fig. 004 “Flow restrictor connection” and then disconnect the other side of the transparent hose from the port on the one way manifold.

Install the free end of the transparent hose and the brass element of the replacement flow restrictor as shown in the picture. Check the connection of the transparent tube end in order to prevent it from sliding out.

Inspect the transparent hose that connects the one way manifold to the analyzer. If evidences of oil or UV tracer are found inside the tube, then it is necessary to replace it. Check the connection of the transparent tube end in order to prevent it from sliding out.

IMPORTANT: *Dispose according to local regulations.*

4.4 Air sensor replacement

NOTE: *Always use goggles and gloves!*
Contact with the refrigerant can cause blindness and other physical injury to the user!

IMPORTANT: *Disconnect the plug from the power supply!*

Removing the Air sensor

1. Carefully pry the oxygen sensor cap from the housing. Gently pull on the cap and wires until the connector exits the housing.
   CAUTION: *The wire connected to the cap is connected internally to the identifier. To prevent equipment damage, do NOT pull on this wire.*

2. Disconnect the wire harness at the connector by pressing on the center tab. Pull the connectors apart. See fig. 005 “Air sensor wire harness”.

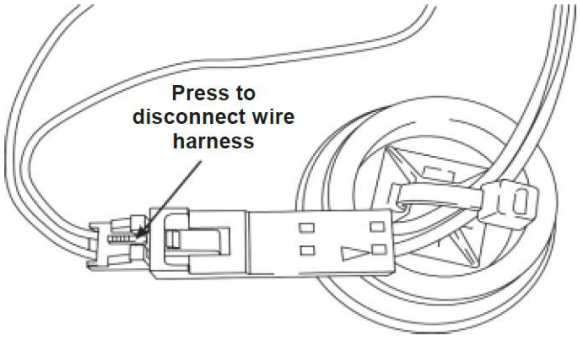

fig. 005 Air sensor wire harness

3. Move the cap and harness aside. Hold the lead from the sensor, and use a flat-blade screwdriver to unthread and remove the oxygen sensor. See fig. 006 “Air sensor detail”.

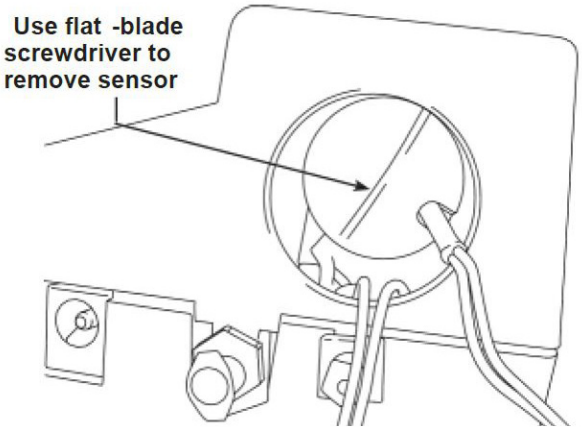

fig. 006 Air sensor detail

Replacing the Air sensor

1. Remove the pink protective film from the threaded end of the new oxygen sensor.
2. Install the new oxygen sensor, using the screwdriver to thread it into place. Tighten the sensor to 4 in. lbs.
3. Reconnect the lead at the connector, and tuck the wires into the opening.
4. Replace the cap and push until it “clicks” into place.
5. Install identifier back into the recovery machine.

IMPORTANT: *Dispose according to local regulations.*

5 Maintenance

5.1 Filter and vacuum pump oil replacement

5.1.1 Replacing the filter

NOTE: *Always use goggles and gloves!*
Contact with the refrigerant can cause blindness and other physical injury to the user!

1. Before dismounting the filter, perform a recovery process in order to reduce the pressure in the internal circuit!

IMPORTANT: *Disconnect the plug from the power supply!*

2. Use a 38 mm wrench to unscrew the filter.

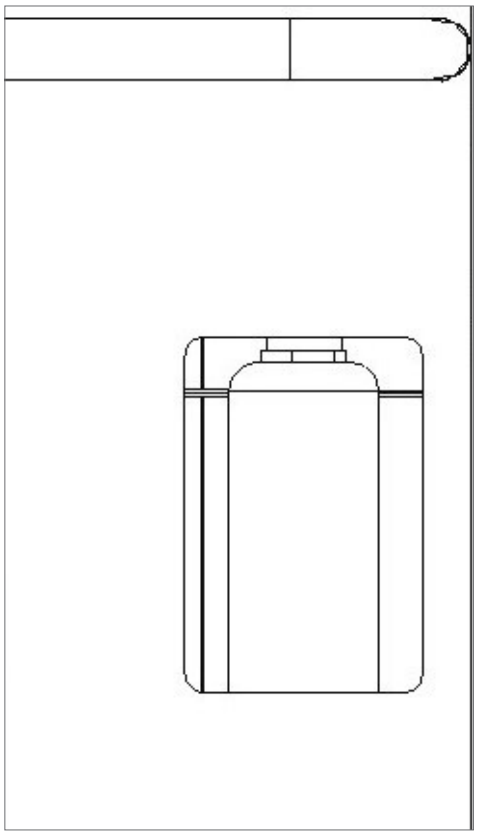

NOTE: *Dispose according to local regulations.*

3. Lubricate and place correctly the new O-rings.

4. Assemble the new filter.

5.1.2 Replacing the vacuum pump oil

NOTE: *Always use goggles and gloves!*
Contact with the refrigerant can cause blindness and other physical injury to the user!

IMPORTANT: *Disconnect the plug from the power supply!*

1. Remove the front cover (4x large head Phillips screws).

2. Unscrew the oil discharge screw (C) and wait for the oil to drain.
   Then refit the discharge screw (C).

NOTE: *Dispose according to local regulations.*

3. Unscrew the muffler (A).

4. Fill with new oil.
   The correct oil level of the pump is around half sight glass (filling capacity approx. 350 ml).

5. Refit the muffler (A).

6. Reassemble the front cover.

NOTE: The picture could show a different type of vacuum pump.

(A) Muffler
(B) Sight glass to indicate the oil level
(C) Discharge screw
(D) Discharge hole

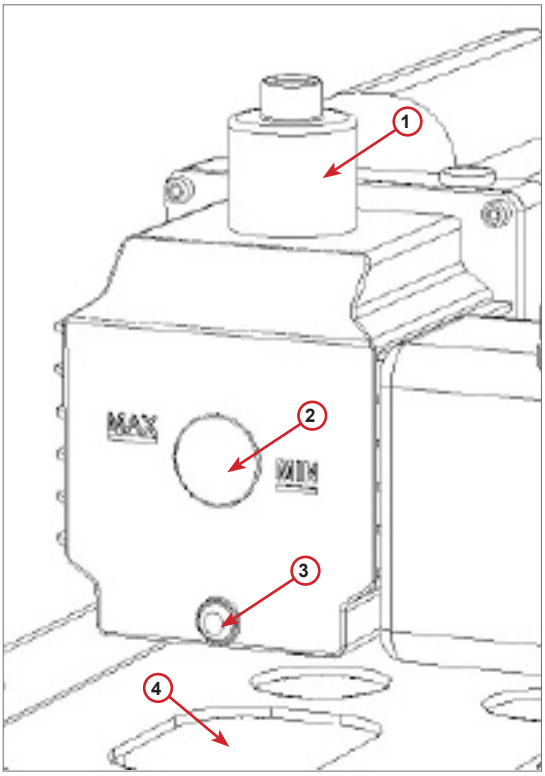

fig. 007 Vacuum pump

5.2 Counter reset (UNLOCK CODE required)

Change filter and vacuum pump oil before resetting maintenance!

NOTE: *Only genuine spare parts or their equivalent The use of replacement parts which are not of equivalent quality may damage the machine!*

Go to website www.coolius-ac.com or call the hotline +497940981888188 to get the UNLOCK CODE for maintenance counter reset.

1. Press ***START*** to continue.

```
Get UNLOCK CODE
register:
            BB111111
 www.coolius-ac.com
```

2. Use the ***COOLIUS SELECT*** to enter the maintenance UNLOCK CODE obtained from www.coolius-ac.com.

   When done, confirm by ***START***.

   - If the UNLOCK CODE is wrong, repeat the step 2.
   - If the UNLOCK CODE is right, go to step 3.

```
      A*******

          A
34567890  BCDEFGHIJK
```

3. Press ***X*** **(CANCEL)** key to confirm.

```
Counter reset.
Confirm by "X"

min.            ///
```

4. Press again ***X*** **(CANCEL)** key to confirm and reset the counter.

```
Counter reset.
Confirm again!
```

Maintenance reset successfully completed.

6 Calibration

1. Select SERVICE and type password: **311299**

   The display shows:

```
Select:
Refrig. weight scale
```

2. Turn ***COOLIUS SELECT*** to select among:
   - Refrigerant weight scale
   - Used oil weight scale
   - Pressure transducer

3. Press ***ENTER*** to confirm the choice.

6.1 Refrigerant weight scale

Unload the refrigerant weight scale

1. Unload the scale by moving the star grip screw of the transport lock to “safety position” (lift the knob and move it to the left).

```
Unload weight scale
(safety position)
```

2. When done, press ***ENTER*** key to confirm the safety position and wait!

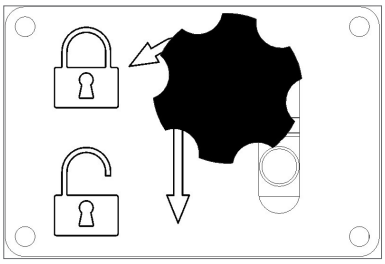

fig. 008 Safety position

Load the refrigerant weight scale

3. Load the scale by moving the star grip screw of the transport lock back to the “working position” (move the knob slightly up and to the right, then fully down).

```
Load weight scale
(working position)
```

4. When done, wait a few seconds then press ***ENTER*** key to confirm and wait for screen change!

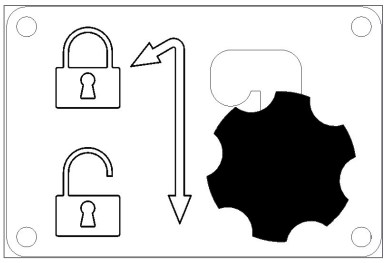

fig. 009 Working position

Place the sample weight

5. Dismount the top cover (remove the 4 screws).

```
Place the sample
weight on the scale.
```

6. Place a known sample weight (minimum 2 kg, suggested 5 kg) on the center of the scale bracket (as shown in the picture).

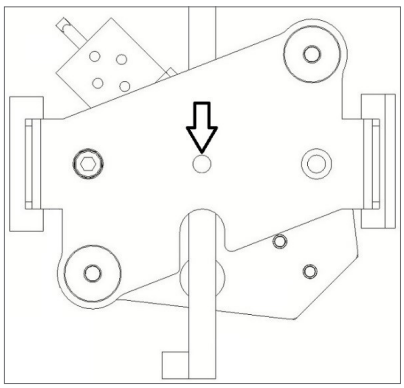

7. When done, wait a few seconds then press ***ENTER*** key to confirm and wait for screen change!

Set the sample weight value

8. Turn ***COOLIUS SELECT*** to set the value of sample weight.

9. When done, press ***START*** to confirm.

   Calibration completed.

```
Set the sample
weight value.

              g.
```

6.2 Used oil weight scale

Unload the used oil weight scale

1. Unload the scale by removing the used oil bottle.

   When done, wait a few seconds then press ***ENTER*** key to confirm.

```
Unload used oil
scale!
```

2. Press ***ENTER*** key again to confirm and wait!

```
Confirm by "ENTER"
used oil scale
unloaded!
```

Place the sample weight

3. Place a known sample weight (minimum 50 g) on the used oil weight scale bracket.

   When done, wait a few seconds then press ***ENTER*** key to confirm and wait for screen change!

```
Place the sample
weight on the scale.
```

Set the sample weight value

4. Turn ***COOLIUS SELECT*** to set the value of sample weight.

5. When done, press ***START*** to confirm.

   Calibration completed.

```
Set the sample
weight value.

                g.
```

6.3 Pressure transducer

IMPORTANT: *The quick coupler must be assembled on the service hoses and the gauges must show 0 (zero) pressure!*

1. Press ***START*** to begin the calibration of pressure transducer.

```
Confirm by "START"
```

2. The vacuum pump starts and perform a short vacuum phase.

   After a few seconds, the displayed value (ADC points) must be lower than 250.

```
Wait!

                xx
```

3. When the vacuum pump stops and the display shows:

   Remove the LP service connector (low pressure side quick coupling) from the BLUE service hose, then press ***ENTER*** to confirm.

   Wait for screen change!

```
Remove the LP
connector from the
service hose.
```

4. Turn ***COOLIUS SELECT*** to set the atmospheric pressure (ex. 1010 mb)

   When done, press ***START*** to confirm.

```
Set the atmospheric
pressure value (abs)
            mb.    0
```

5. Wait the end, then press ***STOP*** to exit.

   Calibration completed.

7 Mainboard test

IMPORTANT NOTE: Machine disconnected from any A/C system or refrigerant tank!
Check that both **HP** and **LP** gauges show zero pressure!

1. Select SERVICE and type password: **228482**

The display shows:

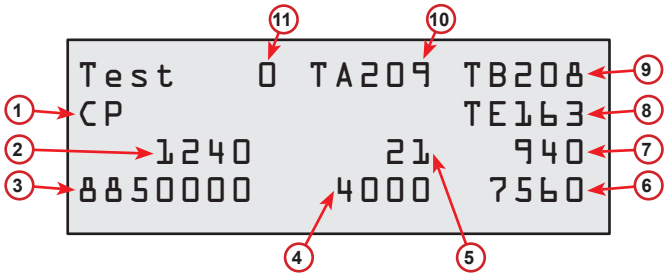

(1) CONTROLLED OUTPUT
(2) REFRIGERANT SCALE — Net compensated value.
(3) REFRIGERANT SCALE — Analog to digital converter points.
(4) USED OIL SCALE — Analog to digital converter points.
(5) USED OIL SCALE — Net value compensated.
(6) PRESSURE TRANSMITTER — Analog to digital converter points.
(7) PRESSURE TRANSMITTER — Absolute pressure compensated value.
(8) TEMPERATURE — External probe [tenths of °C].

NOTE: *If the external temperature probe is not connected to the machine, the value shown on the display shall not be considered as reliable.*

(9) TEMPERATURE — Mainboard “B” (Display) [tenths of °C].
(10) TEMPERATURE — Mainboard “A” (PWR) [tenths of °C].
(11) KEY ID number.

KEY IDENTIFICATION NUMBER

The number identifies the pressed key as described below:

- **0** No key pressed
- **2** ***ENTER*** key (the ***ENTER*** key activates the output indicated on the display, read the instructions before use)
- **4** ***STOP*** key (not visible)
- **8** ***START*** key
- **16** ***X*** **(CANCEL)** key
- **32** ***RIGHT*** key
- **64** ***i*** **(INFO)** key
- **128** ***LEFT*** key

7.1 Analysis of the displayed values

Pressure Transmitter:

With the correct calibration, dismount the LP quick coupler.

The ABS (Absolute) Pressure value compensated shall be roughly the ABS atmospheric pressure -10 / -15 mb.

Blow compressed air into the LP service hose (blue):

The display has to show an increase of the ABS Pressure value and of the ADC points.

Disconnect the Pressure Transmitter connector from the mainboard “A” (PWR).

The ABS Pressure value shall be 1 and the Pressure Transmitter ADC point should be roughly 1.

Refrigerant Scale:

The shown value is the net value (Total–Tare Weight Value)

The ADC point value is the total value.

The first four numbers shall be stable, the last three can float.

The values displayed are directly linked to the weight on the scale.

As a reference, consider that a calibrated scale with all the containers empty shall show roughly 8900000 points. Values that are significantly different from the reference indicate a possible problem.
To check quickly if the weighing system is working correctly it is enough to press on the load cell (scale bracket): both the ADC points and the net value compensated shall increase.

Used Oil Scale:

The value shown is the net value (Total–Tare Weight Value)

The ADC point value is the total value.

The values displayed are directly linked to the weight on the scale.

CPU board temperature °C

The temperature is shown in tenths of Celsius degrees.

The displayed value is the temperature of a sensor mounted on the board.

7.2 Output test

It is possible to activate the devices connected to the mainboard “A” (PWR).

NOTE: *Both quick couplers must be installed!*

Turn ***COOLIUS SELECT*** to select the output to be activated.
Press ***ENTER*** to activate the selected OUTPUT.

NOTE: *In order to avoid the exit of refrigerant from the vacuum pump outlet or from the oil/UV bottles, the activation of VP, UV, NO, HO and of all the combinations containing at least one of them, are possible only when the pressure is lower than 1100 mb.*

- CP Compressor and Compressor fan
- VP Vacuum pump

The HP and LP gauges must show 0 (Zero) bar!

- EO Used oil drain valve (EO)
  Nitrogen discharge valve (EO2)
  Refrigerant analysis circuit oil drain (E3)
- NO New oil valve

The HP and LP gauges must show 0 (Zero) bar!

- UV Dye tracer valve

The HP and LP gauges must show 0 (Zero) bar!

- HO Hybrid oil valve

The HP and LP gauges must show 0 (Zero) bar!

- RF Refrigerant valve
- XP Recovery valve
- LP Separation valve
- A1 Aggregate valve
- A2 Aggregate valve 2
- A3 Nitrogen valve

- A4 Refrigerant analyzer valve (GA)
- A5 Bypass valve (BP)
- CP+XP
- CP+XP+LP+A2
- VP+LP+A2

The HP and LP gauges must show 0 (Zero) bar!

- NO+A2

The HP and LP gauges must show 0 (Zero) bar!

- UV+A2

The HP and LP gauges must show 0 (Zero) bar!

- HO+A2

The HP and LP gauges must show 0 (Zero) bar!

- RF+A2
- LP+A2
- A3+LP+A2

7.3 Phase / Neutral wires pinout

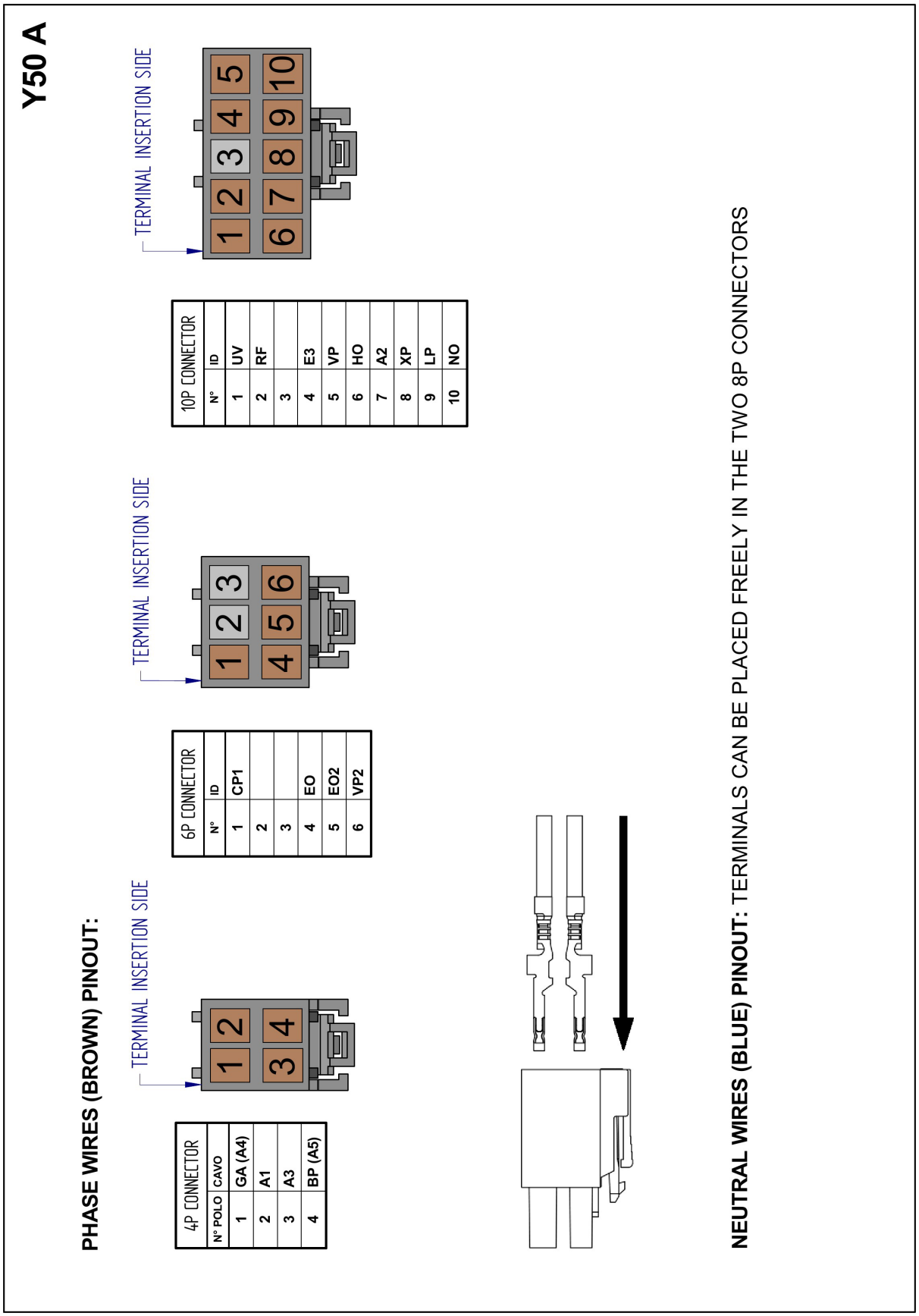

8 Other passwords

Service Passwords

219829 DOWNLOAD – Reset of the flash memory
This procedure does not modify the machine set-up

885479 Machine registration (SN)

Service Report Passwords

014857 DOWNLOAD and DELETE the Service Report ***(CONFIDENTIAL)***

399154 DELETE the Service Report ***(CONFIDENTIAL)***

200200 DOWNLOAD and DELETE the Service Report

Operator Code (OPC) Managing Password

585707 OPC managing password ***(CONFIDENTIAL)***
(See “COOLIUS Confidential Operating Manual Service DataBase” for additional info)

Refrigerant analyzer Password

232323 Cleaning of filter circuit (opens the electric valves on the refrigerant analysis circuit)

9 Contact and support

If you have further questions about the product or need help with the installation, our technical hotline staff will be happy to help you.
Contact information for your country's service partner can be found on our website www.coolius-ac.com

Manufactured by:

WOW ! ITALY
Viale della Stazione 7
39100 Bolzano, Italy

Distributed by:

WOW! Würth Online World GmbH
Schliffenstraße 22
74653 Künzelsau

Phone: +49 7940 981 88 - 0
Fax: +49 7940 981 88 - 10 99
info@wow-portal.com
www.wow-portal.com

WABCOWÜRTH Workshop Services GmbH
Schliffenstraße 22
74653 Künzelsau

Phone: +49 7940 981863-0
Fax: +49 7940 981863-5555
info@wabcowuerth.com
www.wabcowuerth.com

AUTOCOM Diagnostic Partner AB
Grafitvägen 23 B
461 38 Trollhättan, Schweden

Phone: +46 520 470 701
Fax: +46 520 470 727
info@autocom.se
www.autocom.se

9.1 Service Portal COOLIUS-AC.COM

On the website www.coolius-ac.com the activation of the machine can be carried out independently. In addition, you will find further help and instructions for your COOLIUS device on this website.

COOLIUS

WOW! ITALY
Viale della Stazione 7
39100 Bolzano
www.coolius-ac.com

Doc.No.: 225802_Rev.03.01

Responsible for content: Product dept.